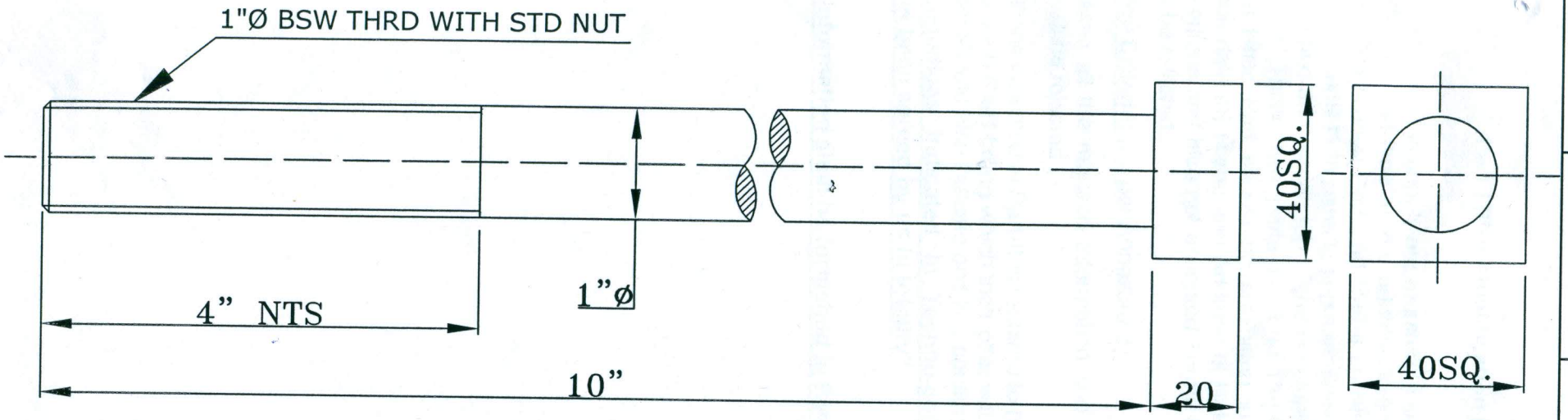

MAT'L:- En-8 (FORGED & HEAT TREATED STEEL ~~W~~ ALLOVER)

Item no.	Qty.	Unit	Part number	Description	Material & Material Spec. no.	Remarks
XXX						

Dept. Name Mech.(Mill)	Reference XXX	Drawn by K.S.Mullick	Checked by ALOK KUMAR	Approved by R. YADAV
UCIL (A Govt. of India Enterprise) An ISO 9001:2008, ISO 14001:2004, IS 18001:2007 Company JADUGUDA MINES, Singhbhum(East), Jharkhand - 832 102		Dwg. No. UCI/M-1002/A Title :- STD HEAD CONE CRUSHER		Document Status RELEASED Scale NTS Rev. 0 Issue Dt. 31/07/18

NO COPYING WITHOUT UCIL PERMISSION EXCEPT AS PERMITTED BY COPYRIGHT LAW